# AirKey cylinder | Outside cylinder AZ29-S – RC1

## Product description

AirKey rim cylinders (RC1) are the ideal solution for doors with Australian auxiliary locks as part of which authorisation checks are merely required on one side and maximum indoor and outdoor security is paramount.

## Technical information

| | |
|---|---|
| Cylinder length on the outside A in mm | Up to 71 mm |
| Finish | NI – nickel \| MP – polished brass |
| Elongated outside thumb turn axis | AV05 – 5 mm \| AV10 – 10 mm \| AV15 – 15 mm |
| Security features | Freely turning outside thumb turn to prevent manipulations \| Rated brake point on the outside thumb turn \| Engages only if authorised \| Event protocol \| Plug pulling protection \| Integrated EAL5+ certified secure element \| ECDSA and AES encryption |
| Standards and guidelines | CE-certified \| IP65 protection |
| Technical installation situation | Inside and outside doors with maximum security requirements and subject to tough weather conditions. Suitable for installation in fire doors. With FZG free-wheel function as standard |
| Compatible identification technologies | NFC smartcards as card identification media, key tags and combi keys \| Bluetooth 4.0 (BLE) \| NFC |
| Battery | 2 CR2 lithium batteries \| Up to 30,000 cycles |
| Signals | Visual + audible |
| Conditions of use | Ambient temperature range: –20 °C to +55 °C (depending on the battery) \| Humidity < 90 %, non-condensing \| For 100,000 cycles \| Minimum backset 35 mm, IP65 protection |
| Event log | Last 1,000 events |
| Interfaces | BLE \| NFC \| Connection to emergency power device |
| Included components | AirKey cylinder \| 2 CR2 lithium batteries \| Assembly manual \| Important information |
| Product code | E.A.AI.AZ29-S.RC1.[Finish].FZG.[Option] |
| Example | E.A.AI.AZ29-S.RC1.NI.FZG |
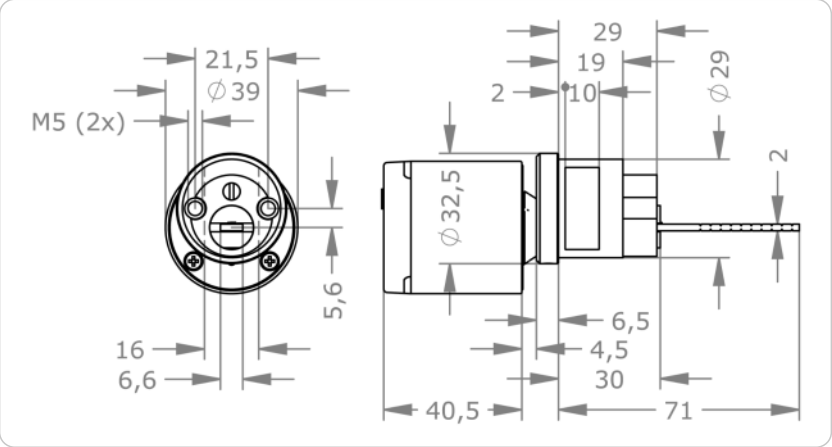
## Dimensional drawing