10 20 30 40 50 60 70 80

EVVA
access to security

RU

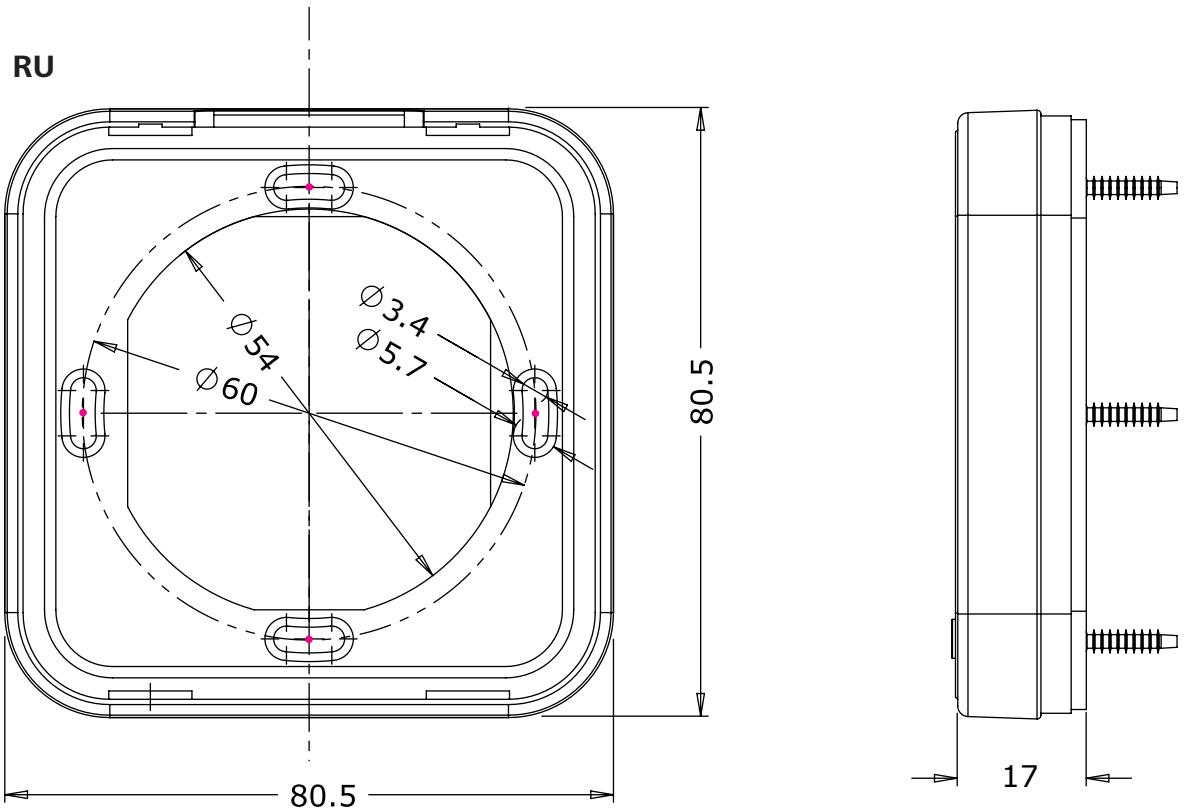

RA

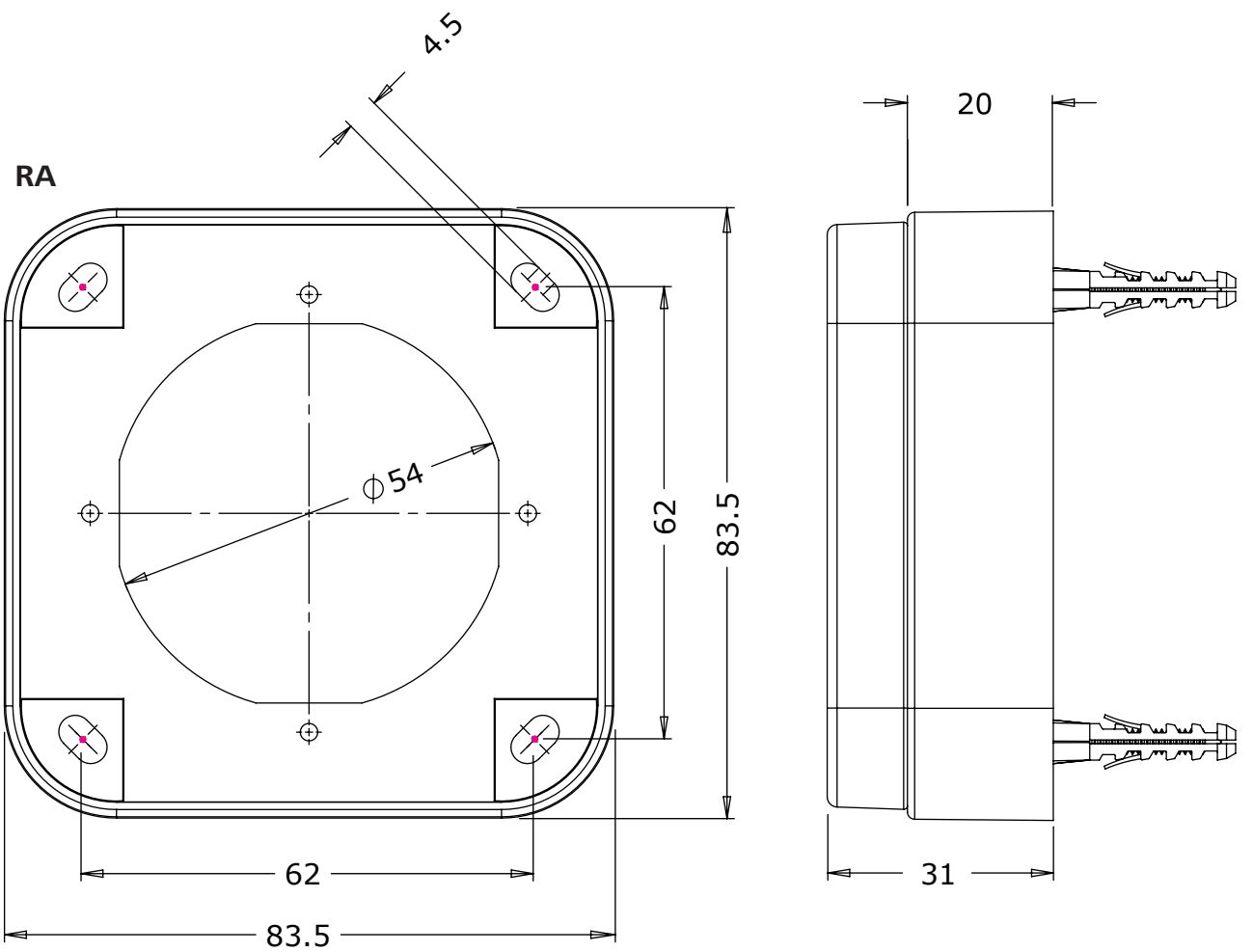

W.TD.BS.WL.V1.LN.SN

10 20 30 40 50 60 70 80